STOCK # M41750

GRAPPLE TRUCK

DUMP BODY SPECIFICATIONS

General
- Model BDR+24-93-93
- Floor - Ep - 1/4" 450 Brinell
- Front - Ep - 3/16" 450 Brinell
- Sides - Ep - 3/16" 450 Brinell
- Tailgate - Ep - 3/16" 450 Brinell
- Long Sills - Ep - 3/16" 250 Brinell
- Outside Body Width – 101
- Bdr Offset Length – 30
- Hoist Attachment - Front Mount
- Front Design - Hoist Recessed 90° Corners
- Front Height Including Longsills – 72
- Longsills Shape - Formed 8
- 34 Longsills Outside Width
- 27 Longsills Inside Width

Cabshield
- Cabshield Width – 89

Side
- Side Shape - Bdr Formed Side
- Top Rail Section – Formed

Lighting Options
- Light Holes In Each Rear Posts - 2 X Oval
- Rear Post Light Kit - Premium Double Light Kit (stt/strobe)
- Holes On Side of Rear Posts - Non-Recessed-1 Included

Rear
- Manual Swing Gate Disaster Relief Body
- Lock Positioning - Bdr Manual
- Bolster Shape - Standard Flat Rear Bolster
- ICC Bumper
- Locking System – Manual
- Tailgate Panel - 2 Panels

Hoist
- HYVA FC A6.5-4-183-K8-HC

Installation Parts
- 40 Ton – Cradle
- 40 Ton Hoist Bracket
- 40-50 Ton Upper Cylinder Blocks (2x)
- Rear Hinge - 30-40 Ton (27") Standard

Underneath Options
- Body Prop - Body Prop to be Mounted On Cradle
- Mud Gard Brackets - Universal Mud Guard Kit
- Rubber Bumper - Rubber Bumper (2x)
- Longsills Reinforcement Brackets

Installation
- Paint-Black
- Shovel Kit

GRAPPLE SPECIFICATIONS

Rotobec Elite 910 Loader, as follows:
- Basic Elite 910 Loader
- 12V Electrical system
- MT27-Telescopic Boom (27’2”)
- ‘A’ Stabilizers for truck mount
- Std Yoke
- Std Incline Ladder
- 2 Std Halogen Lights
- Std Paint
- Std Hyd Hoses
- P330 Truck Install Kit
- Seat Belt
- Commercial Gear Pump splined shaft for direct mount on PTO
- Direct Mount Kit for pump
- 55 Gal Hyd Tank, Mounting straps, filter strainer, check valve, and other accessories including
- Anchor for truck loader installed on truck
- Rotobec 045W Waste & Recycling Grapple
- RT142-Rotation

C H A S I S C O N D E N S E D S P E C I F I C A T I O N

Data Code	Description	Weight Front	Weight Rear
001-177	114SD CONVENTIONAL CHASSIS	7,934	6,476
002-004	SET BACK AXLE - TRUCK	480	-480
101-2X9	DETROIT DD13 12.8L 450 HP @ 1625 RPM, 1900 GOV RPM, 1550 LB-FT @ 975 RPM		
128-002	JACOBS COMPRESSION BRAKE		
016-1C2	RH OUTBOARD UNDER STEP MOUNTED HORIZONTAL AFTERTREATMENT SYSTEM ASSEMBLY WITH RH B-PILLAR MOUNTED VERTICAL TAILPIPE	30	25
342-1M3	ALLISON 4500 RDS AUTOMATIC TRANSMISSION WITH PTO PROVISION	260	100
400-1AC	MFS-20-133A 20,000# FL1 71.0 INCH KPI/3.74 INCH DROP SINGLE FRONT AXLE	260	
620-006	20,000# FLAT LEAF FRONT SUSPENSION	310	
420-111	RT-46-160P 46,000# R-SERIES TANDEM REAR AXLE		450
421-456	4.56 REAR AXLE RATIO		
622-248	CHALMERS 854 46,000# HIGH STABILITY REAR SUSPENSION WITH #29 CAN		370
545-720	7200MM (284 INCH) WHEELBASE		
546-1B2	1/2X3.64X11-7/8 INCH STEEL FRAME (12.7MMX301.6MM/0.5X11.88 INCH) 120KSI	1,080	70
204-156	100 GALLON/378 LITER ALUMINUM FUEL TANK - LH	20	
093-1E2	MICHELIN XFE 425/65R22.5 20 PLY RADIAL FRONT TIRES	172	
094-1UY	MICHELIN X MULTI D 11R22.5 16 PLY RADIAL REAR TIRES		120
502-566	MAXION WHEELS 10035 22.5X12.25 10-HUB PILOT 4.75 INSET 5-HAND STEEL DISC FRONT WHEELS	102	
505-1F2	MAXION WHEELS 90541 22.5X8.25 10-HUB PILOT 6.20 INSET 2-HAND STEEL DISC REAR WHEELS		
829-1A2	114 INCH BBC FLAT ROOF ALUMINUM CONVENTIONAL CAB		
980-5F6	CAB COLOR A: L0006EY WHITE ELITE EY		
986-020	BLACK, HIGH SOLIDS POLYURETHANE CHASSIS PAINT		

Adjusted List Price

Adjusted List Price **

Weight Summary

Weight Front	Weight Rear	Total Weight

Factory Weight+	11130 lbs	9737 lbs	20867 lbs
Total Weight+	11130 lbs	9737 lbs	20867 lbs

I T E M S N O T I N C L U D E D I N A D J U S T E D L I S T P R I C E

Other Factory Charges

DELIVERY & ORDER PROCESSING CHARGE

(+) Weights shown are estimates only.
If weight is critical, contact Customer Application Engineering.
(**) Prices shown do not include taxes, fees, etc… “Net Equipment Selling Price” is located on the Quotation Details Proposal Report.

(***) All cost increases for major components (Engines, Transmissions, Axles, Front and Rear Tires) and government mandated requirements, tariffs, and raw material surcharges will be passed through and added to factory invoices.

Components shown may not reflect all spec'd options and are not to scale

S P E C I F I C A T I O N

Data Code	Description	Weight Front	
PRL-23D	SD PRL-23D (EFF:01/21/20)		
DRL-042	SPECPRO21 DATA RELEASE VER 042		
001-177	114SD CONVENTIONAL CHASSIS	7,934	6,476
004-223	2023 MODEL YEAR SPECIFIED		
002-004	SET BACK AXLE - TRUCK	480	-480
019-002	STRAIGHT TRUCK PROVISION		
003-001	LH PRIMARY STEERING LOCATION		
AA1-002	TRUCK CONFIGURATION		
AA6-001	DOMICILED, USA 50 STATES (INCLUDING CALIFORNIA AND CARB OPT-IN STATES)		
A85-010	UTILITY/REPAIR/MAINTENANCE SERVICE		

	Data Code	Description	Weight Front
	A84-1GM	GOVERNMENT BUSINESS SEGMENT	
	AA4-002	LIQUID BULK COMMODITY	
	AA5-002	TERRAIN/DUTY: 100% (ALL) OF THE TIME, IN TRANSIT, IS SPENT ON PAVED ROADS	
	AB1-008	MAXIMUM 8% EXPECTED GRADE	
	AB5-001	SMOOTH CONCRETE OR ASPHALT PAVEMENT - MOST SEVERE IN-TRANSIT (BETWEEN SITES) ROAD SURFACE	
	995-1AE	FREIGHTLINER LEVEL II WARRANTY	
	A66-99D	EXPECTED FRONT AXLE(S) LOAD : 20000.0 lbs	
	A68-99D	EXPECTED REAR DRIVE AXLE(S) LOAD : 46000.0 lbs	
	A69-99D	EXPECTED TAG AXLE(S) LOAD : 13300.0 lbs	
	A63-99D	EXPECTED GROSS VEHICLE WEIGHT CAPACITY : 79300.0 lbs	
	AA3-034	SEWER/INDUSTRIAL VACUUM BODY	
	A88-99D	EXPECTED TRUCK BODY LENGTH : 12.0 ft	
	AF3-2C8	WEST-MARK	
	AF7-99D	EXPECTED BODY/PAYLOAD CG HEIGHT ABOVE FRAME "XX" INCHES : 32.0 in	
	101-2X9	DETROIT DD13 12.8L 450 HP @ 1625 RPM, 1900 GOV RPM, 1550 LB-FT @ 975 RPM	
N	79A-075	75 MPH ROAD SPEED LIMIT	
	79B-000	CRUISE CONTROL SPEED LIMIT SAME AS ROAD SPEED LIMIT	
	79G-006	5 MINUTES IDLE SHUTDOWN WITH CLUTCH AND SERVICE BRAKE OVERRIDE	
	79K-007	PTO MODE ENGINE RPM LIMIT - 1100 RPM	
	79L-001	PTO MODE THROTTLE OVERRIDE - LIMIT TO 800 RPM	
	79M-002	PTO MODE BRAKE OVERRIDE - SERVICE BRAKE APPLIED OR PARK BRAKE NOT APPLIED	
	79P-002	PTO RPM WITH CRUISE SET SWITCH - 700 RPM	
	79Q-003	PTO RPM WITH CRUISE RESUME SWITCH - 800 RPM	
	79S-001	PTO MODE CANCEL VEHICLE SPEED - 5 MPH	
	79T-001	PTO MODE RPM INCREMENT - 25 RPM	
	79U-007	PTO GOVERNOR RAMP RATE - 250 RPM PER SECOND	
	79W-001	ONE REMOTE PTO SPEED	
	79X-008	PTO SPEED 1 SETTING - 1100 RPM	
	80D-001	SOFT CRUISE CONTROL ENABLED	
	80G-001	PTO MINIMUM RPM - 600	
	80L-001	ENABLE AUTO ENGINE RPM ELEVATE FOR EXTENDED IDLE	

Data Code	Description	Weight Front	
99C-017	2016-2019 ONBOARD DIAGNOSTICS/2010 EPA/CARB/FINAL GHG17 CONFIGURATION		
99D-011	2008 CARB EMISSION CERTIFICATION - CLEAN IDLE (INCLUDES 6X4 INCH LABEL ON LOWER FORWARD CORNER OF DRIVER DOOR)		
13E-001	STANDARD OIL PAN		
105-001	ENGINE MOUNTED OIL CHECK AND FILL		
014-1B5	SIDE OF HOOD AIR INTAKE WITH DONALDSON HIGH CAPACITY AIR CLEANER WITH SAFETY ELEMENT, FIREWALL MOUNTED		
124-1D7	DR 12V 160 AMP 28-SI QUADRAMOUNT PAD ALTERNATOR WITH REMOTE BATTERY VOLT SENSE		
292-236	(3) DTNA GENUINE, FLOODED STARTING, MIN 3000CCA, 555RC, THREADED STUD BATTERIES		
290-017	BATTERY BOX FRAME MOUNTED		
281-001	STANDARD BATTERY JUMPERS		
282-001	SINGLE BATTERY BOX FRAME MOUNTED LH SIDE UNDER CAB		
291-017	WIRE GROUND RETURN FOR BATTERY CABLES WITH ADDITIONAL FRAME GROUND RETURN		
289-001	NON-POLISHED BATTERY BOX COVER		
87P-001	CAB AUXILIARY POWER CABLE	5	
33M-001	AUXILIARY POWER NET DISTRIBUTION BLOCK FOR BODY BUILDER USE	5	
293-058	POSITIVE LOAD DISCONNECT WITH CAB MOUNTED CONTROL SWITCH MOUNTED OUTBOARD DRIVER SEAT	10	
295-029	POSITIVE AND NEGATIVE POSTS FOR JUMPSTART LOCATED ON FRAME NEXT TO STARTER	2	
107-044	BW MODEL BA-921 19.0 CFM SINGLE CYLINDER AIR COMPRESSOR WITH SAFETY VALVE		
152-040	ELECTRONIC ENGINE INTEGRAL WARNING AND DERATE PROTECTION SYSTEM		
128-002	JACOBS COMPRESSION BRAKE		
016-1C2	RH OUTBOARD UNDER STEP MOUNTED HORIZONTAL AFTERTREATMENT SYSTEM ASSEMBLY WITH RH B-PILLAR MOUNTED VERTICAL TAILPIPE	30	25
28F-007	ENGINE AFTERTREATMENT DEVICE, AUTOMATIC OVER THE ROAD ACTIVE REGENERATION AND DASH MOUNTED SINGLE REGENERATION REQUEST/INHIBIT SWITCH		
239-038	11 FOOT 06 INCH (138 INCH+0/-5.9 INCH) EXHAUST SYSTEM HEIGHT		
233-017	STANDARD CURVE BRIGHT UPPER STACK(S)		
237-1CR	RH CURVED VERTICAL TAILPIPE B-PILLAR MOUNTED ROUTED FROM STEP		

Data Code	Description	Weight Front	
23U-001	6 GALLON DIESEL EXHAUST FLUID TANK	-35	-10
30N-003	100 PERCENT DIESEL EXHAUST FLUID FILL		
23Y-001	STANDARD DIESEL EXHAUST FLUID PUMP MOUNTING		
43X-002	LH MEDIUM DUTY STANDARD DIESEL EXHAUST FLUID TANK LOCATION		
43Y-001	STANDARD DIESEL EXHAUST FLUID TANK CAP		
242-001	STAINLESS STEEL AFTERTREATMENT DEVICE/MUFFLER/TAILPIPE SHIELD		
273-036	BORG WARNER (KYSOR) REAR AIR ON/OFF ENGINE FAN CLUTCH		
276-001	AUTOMATIC FAN CONTROL WITHOUT DASH SWITCH, NON ENGINE MOUNTED		
110-068	DDC SUPPLIED ENGINE MOUNTED FUEL FILTER/FUEL WATER SEPARATOR WITH WATER-IN-FUEL INDICATOR		
118-001	FULL FLOW OIL FILTER		
266-057	1500 SQUARE INCH ALUMINUM RADIATOR		
103-039	ANTIFREEZE TO -34F, OAT (NITRITE AND SILICATE FREE) EXTENDED LIFE COOLANT		
171-007	GATES BLUE STRIPE COOLANT HOSES OR EQUIVALENT		
172-001	CONSTANT TENSION HOSE CLAMPS FOR COOLANT HOSES		
270-023	HDEP FIXED RATIO COOLANT PUMP AND RADIATOR DRAIN VALVE		
138-005	PHILLIPS-TEMRO 1500 WATT/115 VOLT BLOCK HEATER	4	
140-053	BLACK PLASTIC ENGINE HEATER RECEPTACLE MOUNTED UNDER LH DOOR		
155-076	DELCO 12V MOD 3.175-39MT+ STARTER WITH ENGINE ECU SOFTWARE PROTECTION AND INTEGRATED MAGNETIC SWITCH	-45	
342-1M3	ALLISON 4500 RDS AUTOMATIC TRANSMISSION WITH PTO PROVISION	260	100
343-316	ALLISON VOCATIONAL PACKAGE 150 - AVAILABLE ON 3000/4000 PRODUCT FAMILIES WITH VOCATIONAL MODEL RDS		
84B-012	ALLISON VOCATIONAL RATING FOR ON/OFF HIGHWAY APPLICATIONS AVAILABLE WITH ALL PRODUCT FAMILIES		
84C-023	PRIMARY MODE GEARS, LOWEST GEAR 1, START GEAR 1, HIGHEST GEAR 6, AVAILABLE FOR 3000/4000 PRODUCT FAMILIES ONLY		
84D-023	SECONDARY MODE GEARS, LOWEST GEAR 1, START GEAR 1, HIGHEST GEAR 6, AVAILABLE FOR 3000/4000 PRODUCT FAMILIES ONLY		

Data Code	Description	Weight Front
84E-000	PRIMARY SHIFT SCHEDULE RECOMMENDED BY DTNA AND ALLISON, THIS DEFINED BY ENGINE AND VOCATIONAL USAGE	
84F-000	SECONDARY SHIFT SCHEDULE RECOMMENDED BY DTNA AND ALLISON, THIS DEFINED BY ENGINE AND VOCATIONAL USAGE	
84G-000	PRIMARY SHIFT SPEED RECOMMENDED BY DTNA AND ALLISON, THIS DEFINED BY ENGINE AND VOCATIONAL USAGE	
84H-000	SECONDARY SHIFT SPEED RECOMMENDED BY DTNA AND ALLISON, THIS DEFINED BY ENGINE AND VOCATIONAL USAGE	
84U-000	DRIVER SWITCH INPUT - DEFAULT - NO SWITCHES	
84V-001	DIRECTION CHANGE ENABLED WITH MULTIPLEXED SERVICE BRAKES - ALLISON 5TH GEN TRANSMISSIONS	
84M-001	PUMP MODE INPUT ENABLED 3RD/4TH LOCKUP WIRED ON TCM INPUT AJ/BQ - ALLISON 5TH GEN TRANSMISSIONS	
353-065	VEHICLE INTERFACE WIRING CONNECTOR WITH BLUNT CUTS, AT BACK OF CAB	
34C-002	ELECTRONIC TRANSMISSION CUSTOMER ACCESS CONNECTOR MOUNTED BACK OF CAB	
362-823	CUSTOMER INSTALLED CHELSEA 280 SERIES PTO	
363-001	PTO MOUNTING, LH SIDE OF MAIN TRANSMISSION ALLISON	
341-018	MAGNETIC PLUGS, ENGINE DRAIN, TRANSMISSION DRAIN, AXLE(S) FILL AND DRAIN	
345-003	PUSH BUTTON ELECTRONIC SHIFT CONTROL, DASH MOUNTED	
97G-004	TRANSMISSION PROGNOSTICS - ENABLED 2013	
370-011	WATER TO OIL TRANSMISSION COOLER, FRAME MOUNTED	
346-003	TRANSMISSION OIL CHECK AND FILL WITH ELECTRONIC OIL LEVEL CHECK	
35T-001	SYNTHETIC TRANSMISSION FLUID (TES-295 COMPLIANT)	
400-1AC	MFS-20-133A 20,000# FL1 71.0 INCH KPI/3.74 INCH DROP SINGLE FRONT AXLE	260
402-030	MERITOR 16.5X6 Q+ CAST SPIDER CAM FRONT BRAKES, DOUBLE ANCHOR, FABRICATED SHOES	10
403-002	NON-ASBESTOS FRONT BRAKE LINING	
419-023	CONMET CAST IRON FRONT BRAKE DRUMS	
427-001	FRONT BRAKE DUST SHIELDS	5
409-006	FRONT OIL SEALS	

Data Code	Description	Weight Front	
408-001	VENTED FRONT HUB CAPS WITH WINDOW, CENTER AND SIDE PLUGS - OIL		
416-022	STANDARD SPINDLE NUTS FOR ALL AXLES		
405-002	MERITOR AUTOMATIC FRONT SLACK ADJUSTERS		
406-001	STANDARD KING PIN BUSHINGS		
536-055	TRW THP-60 POWER STEERING WITH RCH45 AUXILIARY GEAR	130	
539-003	POWER STEERING PUMP		
534-003	4 QUART POWER STEERING RESERVOIR		
533-001	OIL/AIR POWER STEERING COOLER		
40T-002	CURRENT AVAILABLE SYNTHETIC 75W-90 FRONT AXLE LUBE		
620-006	20,000# FLAT LEAF FRONT SUSPENSION	310	
619-004	GRAPHITE BRONZE BUSHINGS WITH SEALS - FRONT SUSPENSION		
410-001	FRONT SHOCK ABSORBERS		
420-111	RT-46-160P 46,000# R-SERIES TANDEM REAR AXLE		450
421-456	4.56 REAR AXLE RATIO		
424-001	IRON REAR AXLE CARRIER WITH STANDARD AXLE HOUSING		
386-075	MXL 18T MERITOR EXTENDED LUBE MAIN DRIVELINE WITH HALF ROUND YOKES	-10	-10
388-073	MXL 17T MERITOR EXTENDED LUBE INTERAXLE DRIVELINE WITH HALF ROUND YOKES		
452-006	DRIVER CONTROLLED TRACTION DIFFERENTIAL - BOTH TANDEM REAR AXLES		30
878-023	(1) INTERAXLE LOCK VALVE, (1) DRIVER CONTROLLED DIFFERENTIAL LOCK FORWARD-REAR AND REAR-REAR AXLE VALVE		
87A-001	BLINKING LAMP WITH EACH INTERAXLE LOCK SWITCH, INTERAXLE UNLOCK DEFAULT WITH IGNITION OFF		
87B-004	BLINKING LAMP WITH EACH MODE SWITCH, DIFFERENTIAL UNLOCK WITH IGNITION OFF, ACTIVE <5 MPH		
423-085	MERITOR 16.5X8.62 Q+ CAST SPIDER HEAVY DUTY CAM REAR BRAKES, DOUBLE ANCHOR, FABRICATED SHOES		
433-002	NON-ASBESTOS REAR BRAKE LINING		
434-003	STANDARD BRAKE CHAMBER LOCATION		
451-023	CONMET CAST IRON REAR BRAKE DRUMS		-40
425-002	REAR BRAKE DUST SHIELDS		10
440-006	REAR OIL SEALS		
426-1B3	BENDIX EVERSURE LONGSTROKE 2-DRIVE AXLES SPRING PARKING CHAMBERS		

	Data Code	Description	Weight Front
	428-003	HALDEX AUTOMATIC REAR SLACK ADJUSTERS	
	41T-002	CURRENT AVAILABLE SYNTHETIC 75W-90 REAR AXLE LUBE	
	42T-001	STANDARD REAR AXLE BREATHER(S)	
	622-248	CHALMERS 854 46,000# HIGH STABILITY REAR SUSPENSION WITH #29 CAN	370
	621-027	CHALMERS 800 SERIES - LOW RIDE HEIGHT	60
	624-009	54 INCH AXLE SPACING	
	623-006	FORE/AFT AND TRANSVERSE CONTROL RODS	
	439-002	REAR SHOCK ABSORBERS - TWO AXLES (TANDEM)	20
	035-135	HENDRICKSON EX13 COMP 13,500# AIR LIFT STEERABLE TAG SUSPENSION, 15X4 BRAKES, FF1 AXLE	1,320
	443-133	HENDRICKSON EX13 COMP 13,500# FF1 STEERABLE 15X4 BRAKE INTEGRAL TAG AXLE	
	874-015	(1) DASH VALVE AND (1) GAUGE FOR SINGLE LIFT AXLE	
	87F-005	LIFT AXLE WIRING, LIFT IN REVERSE, WITH LAST STATE RETENTION WITH IGNITION OFF	
	896-014	(1)REGULATOR MOUNTED ON CHASSIS FOR SINGLE LIFT AXLE	
	456-1AE	HENDRICKSON 15X4 CAM PUSHER/TAG BRAKES, DOUBLE ANCHOR, FABRICATED SHOES	
	457-002	NON-ASBESTOS PUSHER/TAG BRAKE LINING	
	448-001	CAST IRON OUTBOARD PUSHER/TAG BRAKE DRUMS	
	429-001	PUSHER/TAG BRAKE DUST SHIELDS	5
	442-016	PUSHER/TAG OIL SEALS	
	444-001	VENTED PUSHER/TAG HUB CAPS WITH WINDOW, CENTER AND SIDE PLUGS - OIL	
	445-075	HALDEX LONGSTROKE PUSHER/TAG AXLE SERVICE CHAMBERS	
	458-003	HALDEX AUTOMATIC PUSHER/TAG SLACK ADJUSTERS	
*	626-131	HENDRICKSON EX13 COMP 13,500# AIR LIFT STEERABLE PUSHER SUSPENSION	
	627-005	51 INCH AXLE SPACING PUSHER/TAG	
	490-100	WABCO 4S/4M ABS	
	871-001	REINFORCED NYLON, FABRIC BRAID AND WIRE BRAID CHASSIS AIR LINES	
	904-001	FIBER BRAID PARKING BRAKE HOSE	
	412-001	STANDARD BRAKE SYSTEM VALVES	
	46D-002	STANDARD AIR SYSTEM PRESSURE PROTECTION SYSTEM	
	413-002	STD U.S. FRONT BRAKE VALVE	

Data Code	Description	Weight Front	
432-021	(2) 3-4.5 PSI RELAY VALVES, ONE FOR TANDEM AXLE AND ONE FOR PUSHER/TAG		
480-009	BW AD-9 BRAKE LINE AIR DRYER WITH HEATER	20	
483-003	BENDIX OIL COALESCING FILTER FOR AIR DRYER		
479-005	AIR DRYER MOUNTED INBOARD ON RH RAIL		
460-1AU	STEEL AIR TANKS MOUNTED AFT INSIDE AND/OR BELOW FRAME JUST FORWARD OF REAR SUSPENSION, NO TRIPLE OR TORPEDO TANKS		
607-001	CLEAR FRAME RAILS FROM BACK OF CAB TO FRONT REAR SUSPENSION BRACKET, BOTH RAILS OUTBOARD		
477-004	PULL CABLES ON ALL AIR RESERVOIR(S)		
485-003	QUICK DISCONNECT FITTING WITH TIRE INFLATION KIT	2	
335-004	UPGRADED CHASSIS MULTIPLEXING UNIT		
545-720	7200MM (284 INCH) WHEELBASE		
546-1B2	1/2X3.64X11-7/8 INCH STEEL FRAME (12.7MMX301.6MM/0.5X11.88 INCH) 120KSI	1,080	70
547-001	1/4 INCH (6.35MM) C-CHANNEL INNER FRAME REINFORCEMENT	290	475
552-077	2950MM (116 INCH) REAR FRAME OVERHANG		
55W-011	FRAME OVERHANG RANGE: 111 INCH TO 120 INCH	-130	560
AC8-99D	CALC'D BACK OF CAB TO REAR SUSP C/L (CA) : 217.91 in		
AE8-99D	CALCULATED EFFECTIVE BACK OF CAB TO REAR SUSPENSION C/L (CA) : 214.91 in		
AE4-99D	CALC'D FRAME LENGTH - OVERALL : 429.68 in		
FSS-0LH	CALCULATED FRAME SPACE LH SIDE : 70.26 in		
FSS-0RH	CALCULATED FRAME SPACE RH SIDE : 129.11 in		
553-001	SQUARE END OF FRAME		
587-003	REAR TOW HOOKS		10
550-001	FRONT CLOSING CROSSMEMBER		
559-001	STANDARD WEIGHT ENGINE CROSSMEMBER		
562-055	STANDARD MIDSHIP #1 CROSSMEMBER(S); FIRST MIDSHIP MOUNTED 36.0 INCHES BACK OF CAB		
572-001	STANDARD REARMOST CROSSMEMBER		
565-001	STANDARD SUSPENSION CROSSMEMBER		
556-1E5	14 INCH PAINTED STEEL BUMPER	20	
558-070	REMOVABLE FRONT TOW/RECOVERY DEVICE,STORED ON CHASSIS FRAME	15	
574-001	BUMPER MOUNTING FOR SINGLE LICENSE PLATE		

	Data Code	Description	Weight Front	
	551-007	GRADE 8 THREADED HEX HEADED FRAME FASTENERS		
	605-103	D15-28195-000 CENTER PUNCH TO MARK CENTERLINE OF REAR SUSPENSION ON TOP FLANGE OF FRAME		
	601-020	3D STEP VEHICLE MODEL		
	204-156	100 GALLON/378 LITER ALUMINUM FUEL TANK - LH	20	
*	203-006	60 GALLON ALUMINUM HYDRAULIC RESERVOIR, RH WITH 1-1/4 INCH NPT STANDPIPE FITTINGS	60	55
	218-006	25 INCH DIAMETER FUEL TANK(S)		
	215-005	PLAIN ALUMINUM/PAINTED STEEL FUEL/HYDRAULIC TANK(S) WITH PAINTED BANDS		
*	212-008	FUEL TANK(S) AFT	-35	35
	232-515	15 GALLONS ADDITIONAL FUEL		
	664-001	PLAIN STEP FINISH		
	205-001	FUEL TANK CAP(S)		
	122-1K4	DAVCO 487 FUEL/WATER SEPARATOR WITH ESOC AND 12 VOLT PREHEATER	15	
	216-020	EQUIFLO INBOARD FUEL SYSTEM		
	202-016	HIGH TEMPERATURE REINFORCED NYLON FUEL LINE		
	221-001	FUEL COOLER	10	
	093-1E2	MICHELIN XFE 425/65R22.5 20 PLY RADIAL FRONT TIRES	172	
	094-1UY	MICHELIN X MULTI D 11R22.5 16 PLY RADIAL REAR TIRES		120
	095-1G4	MICHELIN XZE2 11R22.5 14 PLY RADIAL PUSHER/TAG TIRES		12
	418-060	CONMET PRESET PLUS PREMIUM IRON FRONT HUBS		
	450-060	CONMET PRESET PLUS PREMIUM IRON REAR HUBS		
	449-060	CONMET PRESET PLUS PREMIUM IRON PUSHER/TAG HUBS		
	502-566	MAXION WHEELS 10035 22.5X12.25 10-HUB PILOT 4.75 INSET 5-HAND STEEL DISC FRONT WHEELS	102	
	505-1F2	MAXION WHEELS 90541 22.5X8.25 10-HUB PILOT 6.20 INSET 2-HAND STEEL DISC REAR WHEELS		
N	509-433	ACCURIDE 29039 22.5X9.00 10-HUB PILOT 5.25 INSET 5-HAND STEEL DISC PUSHER/TAG WHEELS		66
	496-011	FRONT WHEEL MOUNTING NUTS		

Data Code	Description	Weight Front	
497-011	REAR WHEEL MOUNTING NUTS		
495-011	PUSHER/TAG WHEEL MTG NUTS		
829-1A2	114 INCH BBC FLAT ROOF ALUMINUM CONVENTIONAL CAB		
650-008	AIR CAB MOUNTING		
648-002	NONREMOVABLE BUGSCREEN MOUNTED BEHIND GRILLE		
667-004	FRONT FENDERS SET-BACK AXLE		
754-017	BOLT-ON MOLDED FLEXIBLE FENDER EXTENSIONS	10	
678-018	LH AND RH EXTERIOR GRAB HANDLES WITH SINGLE RUBBER INSERT		
646-041	STATIONARY BLACK GRILLE		
65X-004	BLACK HOOD MOUNTED AIR INTAKE GRILLE		
644-004	FIBERGLASS HOOD		
727-1AF	SINGLE 14 INCH ROUND HADLEY AIR HORN UNDER LH DECK		
726-002	DUAL ELECTRIC HORNS		
728-001	SINGLE HORN SHIELD		
575-001	REAR LICENSE PLATE MOUNT END OF FRAME		
327-012	SWITCH, INDICATOR LIGHT AND WIRING FOR (2) CUSTOMER FURNISHED BEACONS, FOR LH & RH BACK OF CAB ROOF MOUNTING		
312-068	HALOGEN COMPOSITE HEADLAMPS WITH BLACK BEZELS		
302-047	LED AERODYNAMIC MARKER LIGHTS		
311-012	DAYTIME RUNNING LIGHTS - LOW BEAM ONLY		
294-090	OMIT STOP/TAIL/BACKUP LIGHTS AND PROVIDE WIRING FOR COMBINED STOP/TURN LIGHTS TO FOUR FEET BEYOND END OF FRAME		-5
300-015	STANDARD FRONT TURN SIGNAL LAMPS		
318-032	SWITCH, INDICATOR LIGHT AND APPROXIMATELY 10 FEET OF WIRE ON CHASSIS RH BACK OF CAB FOR CUSTOMER FURNISHED UTILITY LIGHT(S)		
744-103	DUAL WEST COAST BRIGHT FINISH HEATED MIRRORS WITH LED LIGHTS AND LH AND RH REMOTE		
797-001	DOOR MOUNTED MIRRORS		
796-001	102 INCH EQUIPMENT WIDTH		
743-204	LH AND RH 8 INCH BRIGHT FINISH CONVEX MIRRORS MOUNTED UNDER PRIMARY MIRRORS		
74A-001	RH DOWN VIEW MIRROR		
729-001	STANDARD SIDE/REAR REFLECTORS		
677-054	RH AFTERTREATMENT SYSTEM CAB ACCESS WITH PLAIN DIAMOND PLATE COVER		

	Data Code	Description	Weight Front
	275-063	2-STAGE ELECTRIC HORN AND HAZARD LAMP ALERT CONTROLLED BY PARTICULATE FILTER REGENERATION REQUIRED STATUS	
	768-043	63X14 INCH TINTED REAR WINDOW	
	661-003	TINTED DOOR GLASS LH AND RH WITH TINTED NON-OPERATING WING WINDOWS	
	654-027	RH AND LH ELECTRIC POWERED WINDOWS, PASSENGER SWITCHES ON DOOR(S)	4
	663-013	1-PIECE SOLAR GREEN GLASS WINDSHELD	
N	659-007	8 LITER (2 GAL) WINDSHIELD WASHER RESERVOIR, CAB MOUNTED, WITHOUT FLUID LEVEL INDICATOR	
	707-1AK	OPAL GRAY VINYL INTERIOR	
	706-026	MOLDED PLASTIC DOOR PANEL WITHOUT VINYL INSERT WITH ALUMINUM KICKPLATE LOWER DOOR	
	708-026	MOLDED PLASTIC DOOR PANEL WITHOUT VINYL INSERT WITH ALUMINUM KICKPLATE LOWER DOOR	
	772-006	BLACK MATS WITH SINGLE INSULATION	
	785-004	DASH MOUNTED ASH TRAY(S) WITHOUT LIGHTER	
	691-008	FORWARD ROOF MOUNTED CONSOLE WITH UPPER STORAGE COMPARTMENTS WITHOUT NETTING	
	694-010	IN DASH STORAGE BIN	
	696-012	CENTER STORAGE CONSOLE MOUNTED ON BACKWALL	20
	742-007	(2) CUP HOLDERS LH AND RH DASH	
	680-006	GRAY/CHARCOAL FLAT DASH	
	860-004	SMART SWITCH EXPANSION MODULE	
	720-003	5 LB. FIRE EXTINGUISHER	10
	700-002	HEATER, DEFROSTER AND AIR CONDITIONER	
	701-008	STANDARD HVAC DUCTING WITH SNOW SHIELD FOR FRESH AIR INTAKE	
	703-005	MAIN HVAC CONTROLS WITH RECIRCULATION SWITCH	
	170-015	STANDARD HEATER PLUMBING	
	130-041	VALEO HEAVY DUTY A/C REFRIGERANT COMPRESSOR	
	702-002	BINARY CONTROL, R-134A	
	739-033	STANDARD INSULATION	
	285-027	SOLID-STATE CIRCUIT PROTECTION AND FUSES WITH SPARE FUSE KIT	
	280-007	12V NEGATIVE GROUND ELECTRICAL SYSTEM	
	324-014	DOME LIGHT WITH 3-WAY SWITCH ACTIVATED BY LH AND RH DOORS	

Data Code	Description	Weight Front	
657-1AW	ALL UNIT(S) KEYED ALIKE WITH CUSTOMER SPECIFIED KEY NUMBER FT1010		
78G-002	KEY QUANTITY OF 2		
655-005	LH AND RH ELECTRIC DOOR LOCKS		
284-101	(1) 12V POWER SUPPLY (1) DUAL 2.1 AMP USB CHARGER IN DASH		
722-028	TRIANGULAR REFLECTORS KIT WITHOUT FLARES SHIPPED LOOSE IN CAB	10	
756-338	BASIC ISRINGHAUSEN HIGH BACK AIR SUSPENSION DRIVERS SEAT WTIH MECHANICAL LUMBAR AND INTEGRATED CUSHION EXTENSION	30	
760-338	BASIC ISRINGHAUSEN HIGH BACK AIR SUSPENSION PASSENGER SEAT WTIH MECHANICAL LUMBAR AND INTEGRATED CUSHION EXTENSION	25	10
711-004	LH AND RH INTEGRAL DOOR PANEL ARMRESTS		
758-022	BLACK MORDURA CLOTH DRIVER SEAT COVER		
761-023	BLACK MORDURA CLOTH PASSENGER SEAT COVER		
763-101	BLACK SEAT BELTS		
532-002	ADJUSTABLE TILT AND TELESCOPING STEERING COLUMN	10	
540-015	4-SPOKE 18 INCH (450MM) STEERING WHEEL		
765-002	DRIVER AND PASSENGER INTERIOR SUN VISORS		
732-004	GRAY DRIVER INSTRUMENT PANEL		
734-004	GRAY CENTER INSTRUMENT PANEL		
87L-001	ENGINE REMOTE INTERFACE WITH PARK BRAKE INTERLOCK		
870-001	BLACK GAUGE BEZELS		
486-001	LOW AIR PRESSURE INDICATOR LIGHT AND AUDIBLE ALARM		
840-002	2 INCH PRIMARY AND SECONDARY AIR PRESSURE GAUGES		
198-025	INTAKE MOUNTED AIR RESTRICTION INDICATOR WITHOUT GRADUATIONS		
721-001	97 DB BACKUP ALARM		3
149-017	ELECTRONIC CRUISE CONTROL WITH SWITCHES ON AUXILIARY GAUGE PANEL (B DASH PANEL)		
156-007	KEY OPERATED IGNITION SWITCH AND INTEGRAL START POSITION; 4 POSITION OFF/RUN/START/ACCESSORY		
811-042	ICU3S, 132X48 DISPLAY WITH DIAGNOSTICS, 28 LED WARNING LAMPS AND DATA LINKED		

Data Code	Description	Weight Front
160-038	HEAVY DUTY ONBOARD DIAGNOSTICS INTERFACE CONNECTOR LOCATED BELOW LH DASH	
844-001	2 INCH ELECTRIC FUEL GAUGE	
845-011	FUEL FILTER RESTRICTION INDICATOR	
148-071	ENGINE REMOTE INTERFACE WITH INCREMENT/DECREMENT	
163-001	ENGINE REMOTE INTERFACE CONNECTOR AT BACK OF CAB	
856-001	ELECTRICAL ENGINE COOLANT TEMPERATURE GAUGE	
864-001	2 INCH TRANSMISSION OIL TEMPERATURE GAUGE	
830-017	ENGINE AND TRIP HOUR METERS INTEGRAL WITHIN DRIVER DISPLAY	
372-051	CUSTOMER FURNISHED AND INSTALLED PTO CONTROLS	
73H-001	POWER, GROUND AND ROOF MOUNTED BRACKET FOR ALLIANCE WIRELESS TECHNOLOGIES (THIRD EYE VIDEO SYSTEM) REAR VISION MONITOR AND VENDOR CAMERA CABLE TO BACK OF CAB	5
852-002	ELECTRIC ENGINE OIL PRESSURE GAUGE	
679-998	NO OVERHEAD INSTRUMENT PANEL	
746-137	AM/FM/WB WORLD TUNER RADIO WITH BLUETOOTH, USB AND AUXILIARY INPUTS, J1939	10
747-001	DASH MOUNTED RADIO	
750-002	(2) RADIO SPEAKERS IN CAB	
748-006	POWER AND GROUND WIRING PROVISION OVERHEAD	
749-016	CB WIRING ONLY TO ROOF/OVERHEAD CONSOLE; NO MOUNTING PROVISION	
752-017	MULTI-BAND AM/FM/WB/CB LH MIRROR MOUNTED ANTENNA SYSTEM	
810-027	ELECTRONIC MPH SPEEDOMETER WITH SECONDARY KPH SCALE, WITHOUT ODOMETER	
817-001	STANDARD VEHICLE SPEED SENSOR	
812-001	ELECTRONIC 3000 RPM TACHOMETER	
813-1B4	VT-HU CONNECTIVITY PLATFORM HARDWARE	
8D1-002	2 YEARS DETROIT CONNECT BASE PACKAGE (VIRTUAL TECHNICIAN, DETROIT CONNECT PORTAL ACCESS) FOR VT-HU CONNECTIVITY PLATFORM	
6TS-003	(2) TMC RP 1226 ACCESSORY CONNECTORS: (1) LOCATED BEHIND DASH B PANEL AND (1) LOCATED PASSENGER SIDE OF DASH	
162-002	IGNITION SWITCH CONTROLLED ENGINE STOP	

Data Code	Description	Weight Front
329-090	(10) IGN CONTROLLED EXTRA SWITCHES WITH IND LIGHTS WIRED TO POWER DIST BOX WITH RELAYS PROVIDING 20 AMPS PER CIRCUIT TO JUNCTION BLOCK AND 1 CIRCUIT AT 30 AMPS	
836-015	DIGITAL VOLTAGE DISPLAY INTEGRAL WITH DRIVER DISPLAY	
660-008	SINGLE ELECTRIC WINDSHIELD WIPER MOTOR WITH DELAY	
304-001	MARKER LIGHT SWITCH INTEGRAL WITH HEADLIGHT SWITCH	
882-009	ONE VALVE PARKING BRAKE SYSTEM WITH WARNING INDICATOR	
299-013	SELF CANCELING TURN SIGNAL SWITCH WITH DIMMER, WASHER/WIPER AND HAZARD IN HANDLE	
298-048	INTEGRAL ELECTRONIC TURN SIGNAL FLASHER WITH STOP LAMPS OVERRIDING HAZARD LAMPS	
065-000	PAINT: ONE SOLID COLOR	
980-5F6	CAB COLOR A: L0006EY WHITE ELITE EY	
986-020	BLACK, HIGH SOLIDS POLYURETHANE CHASSIS PAINT	
962-972	POWDER WHITE (N0006EA) FRONT WHEELS/RIMS (PKWHT21, TKWHT21, W, TW)	
966-972	POWDER WHITE (N0006EA) REAR WHEELS/RIMS (PKWHT21, TKWHT21, W, TW)	
96E-972	POWDER WHITE (N0006EA) PUSHER/TAG WHEELS/RIMS (PKWHT21, TKWHT21, W, TW)	
964-020	STANDARD BLACK BUMPER PAINT	
963-003	STANDARD E COAT/UNDERCOATING	
996-001	U.S. FMVSS CERTIFICATION, EXCEPT SALES CABS AND GLIDER KITS	
998-033	CORPORATE PDI CENTER IN-SERVICE AND OPTION INSTALLATION/MODIFICATION	
AE8-99D	CALCULATED EFFECTIVE BACK OF CAB TO REAR SUSPENSION C/L (CA) : 214.91 in	
	NO SALES PROGRAMS HAVE BEEN SELECTED	

Weight Summary

	Weight Front	Weight Rear	Total Weight
Factory Weight+	11130 lbs	9737 lbs	20867 lbs
Total Weight+	11130 lbs	9737 lbs	20867 lbs

ITEMS NOT INCLUDED IN ADJUSTED LIST PRICE

Other Factory Charges

PNZ-003	CARB22 BASE WARRANTY SURCHARGE DD13 / X12
RD1-002	2 YEARS DETROIT CONNECT BASE PACKAGE (VIRTUAL TECHNICIAN, DETROIT CONNECT PORTAL ACCESS)
RFY-022	FRONT TIRE SURCHARGE
RFU-022	REAR TIRE SURCHARGE
RFV-022	PUSHER/TAG TIRE SURCHARGE
RFZ-023	MY23 PRODUCTION COST SURCHARGE
P73-2FT	STANDARD DESTINATION CHARGE

Extended Warranty

WAG-010	TOWING: 1 YEAR/UNLIMITED MILES/KM EXTENDED TOWING COVERAGE $550 CAP FEX APPLIES

Currency Exchange Rate

Total Extended Warranty (Local Currency)

(+) Weights shown are estimates only.
If weight is critical, contact Customer Application Engineering.

(**) Prices shown do not include taxes, fees, etc… “Net Equipment Selling Price” is located on the Quotation Details Proposal Report.

D I M E N S I O N S

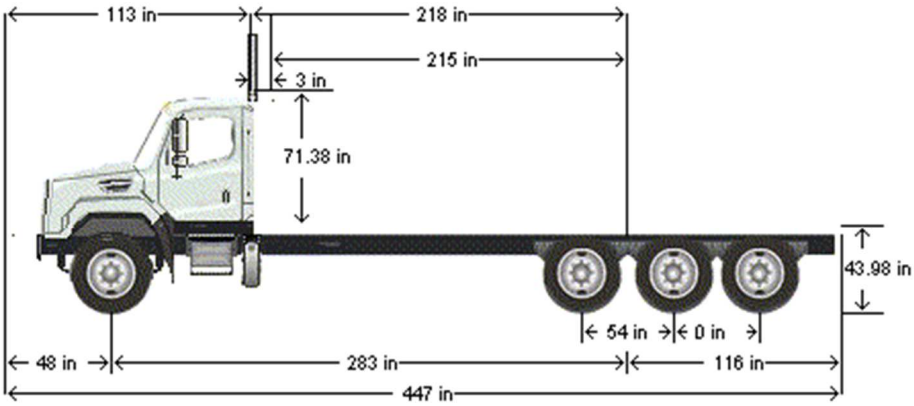

VEHICLE SPECIFICATIONS SUMMARY - DIMENSIONS

Model 114SD
Wheelbase (545) .....7200MM (284 INCH) WHEELBASE
Rear Frame Overhang (552)..... 2950MM (116 INCH) REAR FRAME OVERHANG
Fifth Wheel (578).....NO FIFTH WHEEL
- Mounting Location (577) .....NO FIFTH WHEEL LOCATION
- Maximum Forward Position (in).....0
- Maximum Rearward Position (in) 0
- Amount of Slide Travel (in) 0
- Slide Increment (in).....0
- Desired Slide Position (in) 0.0

Cab Size (829).....114 INCH BBC FLAT ROOF ALUMINUM CONVENTIONAL CAB
Sleeper (682).....NO SLEEPER BOX/SLEEPERCAB
Exhaust System (016).....RH OUTBOARD UNDER STEP MOUNTED HORIZONTAL AFTERTREATMENT SYSTEM ASSEMBLY WITH RH B-PILLAR MOUNTED VERTICAL TAILPIPE

TABLE SUMMARY - DIMENSIONS

Dimensions	Inches
Bumper to Back of Cab (BBC)	113.4
Bumper to Centerline of Front Axle (BA)	47.9
Front Axle to Back of Cab (AC)	65.6
Min. Cab to Body Clearance (CB)	3.0
Back of Cab to Centerline of Rear Axle(s) (CA)	217.9
Effective Back of Cab to Centerline of Rear Axle(s) (Effective CA)	214.9
Back of Cab Protrusions (Exhaust/Intake) (CP)	2.0
Back of Cab Protrusions (Side Extenders/Trim Tab) (CP)	0.0
Back of Cab Protrusions (CNG Tank)	0.0
Back of Cab Clearance (CL)	3.0
Back of Cab to End of Frame	334.0
Cab Height (CH)	71.4
Wheelbase (WB)	283.5
Frame Overhang (OH)	116.1
Overall Frame Length	429.7
Overall Length (OAL)	447.4
Rear Axle Spacing	54.0
Pusher/Tag Axle Spacing	51.0
Unladen Frame Height at Centerline of Rear Axle	44.0

Performance calculations are estimates only. If performance calculations are critical, please contact Customer Application Engineering.

G V W R

VEHICLE SPECIFICATIONS SUMMARY - GVWR

Model 114SD
Cab Size (829).....114 INCH BBC FLAT ROOF ALUMINUM CONVENTIONAL CAB
Expected Front Axle(s) Load (lbs).....20000.0
Expected Pusher Axle(s) Load (lbs).....0.0
Expected Rear Axle(s) Load (lbs).....46000.0
Expected Tag Axle(s) Load (lbs).....13300.0
Expected GVW (lbs).....79300
Expected GCW (lbs).....0.0
Front Axle (400).....MFS-20-133A 20,000# FL1 71.0 INCH KPI/3.74 INCH DROP SINGLE FRONT AXLE
Front Suspension (620).....20,000# FLAT LEAF FRONT SUSPENSION
Front Hubs (418).....CONMET PRESET PLUS PREMIUM IRON FRONT HUBS
Front Disc Wheels (502)MAXION WHEELS 10035 22.5X12.25 10-HUB PILOT 4.75 INSET 5-HAND STEEL DISC FRONT WHEELS
Front Tires (093).....MICHELIN XFE 425/65R22.5 20 PLY RADIAL FRONT TIRES
Front Brakes (402).....MERITOR 16.5X6 Q+ CAST SPIDER CAM FRONT BRAKES, DOUBLE ANCHOR, FABRICATED SHOES
Steering Gear (536).....TRW THP-60 POWER STEERING WITH RCH45 AUXILIARY GEAR
Rear Axle (420).....RT-46-160P 46,000# R-SERIES TANDEM REAR AXLE
Rear Suspension (622).....CHALMERS 854 46,000# HIGH STABILITY REAR SUSPENSION WITH #29 CAN
Rear Hubs (450).....CONMET PRESET PLUS PREMIUM IRON REAR HUBS
Rear Disc Wheels (505)....MAXION WHEELS 90541 22.5X8.25 10-HUB PILOT 6.20 INSET 2-HAND STEEL DISC REAR WHEELS
Rear Tires (094).....MICHELIN X MULTI D 11R22.5 16 PLY RADIAL REAR TIRES
Rear Brakes (423).....MERITOR 16.5X8.62 Q+ CAST SPIDER HEAVY DUTY CAM REAR BRAKES, DOUBLE ANCHOR, FABRICATED SHOES
Pusher / Tag Axle (443).....HENDRICKSON EX13 COMP 13,500# FF1 STEERABLE 15X4 BRAKE INTEGRAL TAG AXLE
Pusher / Tag Suspension (626).....HENDRICKSON EX13 COMP 13,500# AIR LIFT STEERABLE PUSHER SUSPENSION
Pusher / Tag Hubs (449).....CONMET PRESET PLUS PREMIUM IRON PUSHER/TAG HUBS
Pusher/Tag Disc Wheels (509).....ACCURIDE 29039 22.5X9.00 10-HUB PILOT 5.25 INSET 5-HAND STEEL DISC PUSHER/TAG WHEELS
Pusher / Tag Tires (095).....MICHELIN XZE2 11R22.5 14 PLY RADIAL PUSHER/TAG TIRES
Pusher / Tag Brakes (456).....HENDRICKSON 15X4 CAM PUSHER/TAG BRAKES, DOUBLE ANCHOR, FABRICATED SHOES

TABLE SUMMARY - GVWR

	Front	Rear 1	Rear 2	Tag
Axle Component Weight Ratings				
Axles	20000	23000	23000	0
Suspension	20000	23000	23000	0
Hubs	23000	26000	26000	14700
Brakes	20000	24999	24999	13300
Wheels	22800	29600	29600	20000
Tires	22800	24020	24020	12350
Power Steering	22000	N/A	N/A	N/A
GAWR (per axle)	20000	23000	23000	0
GAWR (per axle system)	20000		46000	0
Expected Load (per axle system)	20000		46000	13300
GVWR due to Frame	90000			
GVWR due to Transmission	300000			
Vehicle GVWR Summary				
Calculated GVWR	66000			
Expected GVWR	79300			
All weights displayed in pounds				

Performance calculations are estimates only. If performance calculations are critical, please contact Customer Application Engineering.

TRUCK WEIGHT

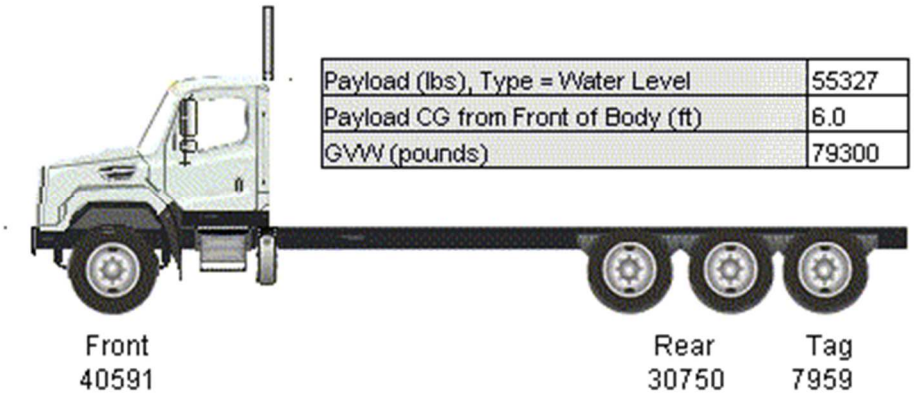

Payload (lbs), Type = Water Level	55327
Payload CG from Front of Body (ft)	6.0
GVW (pounds)	79300

VEHICLE SPECIFICATIONS SUMMARY - TRUCK WEIGHT

Model 114SD
Cab Size (829) ..... 114 INCH BBC FLAT ROOF ALUMINUM CONVENTIONAL CAB
Expected Front Axle(s) Load (lbs) 20000.0
Expected Pusher Axle(s) Load (lbs) 0.0
Expected Rear Axle(s) Load (lbs) 46000.0
Expected Tag Axle(s) Load (lbs) 13300.0
Expected GVW (lbs) 79300
Expected GCW (lbs) 0.0
Wheelbase (545) ..... 7200MM (284 INCH) WHEELBASE
Pusher / Tag Axle (443) ..... HENDRICKSON EX13 COMP 13,500# FF1 STEERABLE 15X4 BRAKE INTEGRAL TAG AXLE
Front Axle to Back of Cab (in) 65.551
Cab to Body Clearance (in) 3.0
Front Axle to Body (in) 68.551
Truck Configuration (AA3) ..... SEWER/INDUSTRIAL VACUUM BODY
- Body Length (ft) 12.0
- Body Weight (lbs) 1700.0
- Body Horiz CG from Body Front (ft) 5.5
- Body Front to Rear Axle(s) CL (ft) 17.91

Driver Weight (lbs) 200.0
Driver Horizontal CG from Front Axle (in) 39.18
Left-Hand Primary Fuel/Hydraulic Tank (204) ..... 100 GALLON/378 LITER ALUMINUM FUEL TANK - LH
- Left Fuel Tank Horizontal CG (in) 146.291

Right-Hand Primary Fuel/Hydraulic Tank (206) ..... NO RH FUEL TANK
- Right Fuel Tank Horizontal CG (in) 0

TABLE SUMMARY - TRUCK WEIGHT

Item	Front(s)	Rear(s)	Tag(s)	Total
Pusher/Tag Up				
Chassis Tare	11130	9737	0	**20867**
Fuel / Oil	636	570	0	**1206**
Driver	172	28	0	**200**
Dealer Installed Options	0	0	0	**0**
Accessories Total	0	0	0	**0**
Body Tare	893	807	0	**1700**
Truck Tare Weight	**12831**	**11142**	**0**	**23973**
Payload Total	27894	27433	0	**55327**
Calculated Axle Loads	**40725**	**38575**	**0**	**79300**
Expected Axle Loads / GVW	20000	46000	13300	**79300**
Creep GAWR / GVWR (*Max 5 MPH)	30000	60000	0	**90000**
GAWR / GVWR	20000	46000	0	**66000**
Pusher/Tag Down				
Chassis Tare	10996	8468	1403	**20867**
Fuel / Oil	636	442	128	**1206**
Driver	172	22	6	**200**
Dealer Installed Options	0	0	0	**0**
Accessories Total	0	0	0	**0**
Body Tare	893	538	269	**1700**
Truck Tare Weight	**12697**	**9470**	**1806**	**23973**
Payload Total	27894	21280	6153	**55327**
Calculated Axle Loads	**40591**	**30750**	**7959**	**79300**
Expected Axle Loads / GVW	20000	46000	13300	**79300**
GAWR / GVWR	20000	46000	0	**66000**
Payload CG From Front of Body		6 feet		
Payload CG From Front Axle		11.7 feet		
Payload Distribution		Water Level		
All weights displayed in pounds				

Item	Front(s)	Rear(s)	Tag(s)	Total
Pusher/Tag Up				
Chassis Tare	11130	9737	0	**20867**
Fuel / Oil	636	570	0	**1206**
Driver	172	28	0	**200**
Dealer Installed Options	0	0	0	**0**
Accessories Total	0	0	0	**0**
Body Tare	893	807	0	**1700**
Truck Tare Weight	**12831**	**11142**	**0**	**23973**
Payload Total	27894	27433	0	**55327**
Calculated Axle Loads	**40725**	**38575**	**0**	**79300**
Expected Axle Loads / GVW	20000	46000	13300	**79300**
Creep GAWR / GVWR (*Max 5 MPH)	30000	60000	0	**90000**
GAWR / GVWR	20000	46000	0	**66000**
Pusher/Tag Down				
Chassis Tare	10996	8468	1403	**20867**
Fuel / Oil	636	442	128	**1206**
Driver	172	22	6	**200**
Dealer Installed Options	0	0	0	**0**
Accessories Total	0	0	0	**0**
Body Tare	893	538	269	**1700**
Truck Tare Weight	**12697**	**9470**	**1806**	**23973**
Payload Total	27894	21280	6153	**55327**
Calculated Axle Loads	**40591**	**30750**	**7959**	**79300**
Expected Axle Loads / GVW	20000	46000	13300	**79300**
GAWR / GVWR	20000	46000	0	**66000**
Payload CG From Front of Body		6 feet		
Payload CG From Front Axle		11.7 feet		
Payload Distribution		Water Level		
All weights displayed in pounds				

Performance calculations are estimates only. If performance calculations are critical, please contact Customer Application Engineering.

U N L A D E N F R A M E H E I G H T

Unladen Height	Requested	Calculated
Tow Hitch (in)	0.00 to 0.00	32.50
Frame (in)	N/A	44.00

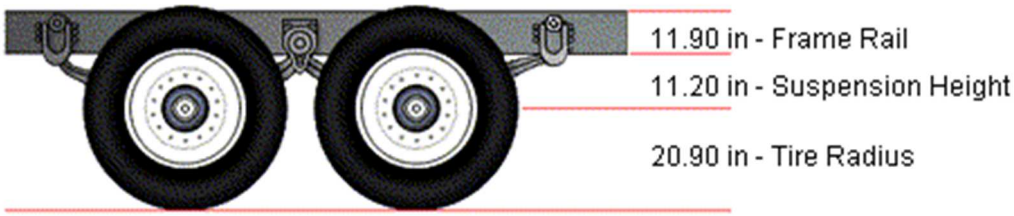

VEHICLE SPECIFICATIONS SUMMARY - UNLADEN FRAME HEIGHT

Model 114SD
Cab Size (829).....114 INCH BBC FLAT ROOF ALUMINUM CONVENTIONAL CAB
Frame Rails (546).....1/2X3.64X11-7/8 INCH STEEL FRAME (12.7MMX301.6MM/0.5X11.88 INCH) 120KSI(546)
    Web Height (in) 11.875
    Flange Thickness (in).....0.4375
Rear Suspension (622) .....CHALMERS 854 46,000# HIGH STABILITY REAR SUSPENSION WITH #29 CAN
Rear Suspension Ride Height (621).....CHALMERS 800 SERIES - LOW RIDE HEIGHT
Axle C/L to Bottom of Frame (in) 11.25
Rear Tires (094) .....MICHELIN X MULTI D 11R22.5 16 PLY RADIAL REAR TIRES
    Unladen Radius (in) 20.85
Fifth Wheel (578).....NO FIFTH WHEEL
    Requested Min Height (in) 0.0
    Requested Max Height (in) 1
    Fifth Wheel Leg Height (582).....NO FIFTH WHEEL LEG HEIGHT
Rear Tow Device (587) .....REAR TOW HOOKS
    Tow Device Height(588) .....NO REAR TOW DEVICE HEIGHT
    Requested Min Height (in) 0.0
    Requested Max Height (in) 0.0

Performance calculations are estimates only. If performance calculations are critical, please contact Customer Application Engineering.

S P E E D A B I L I T Y

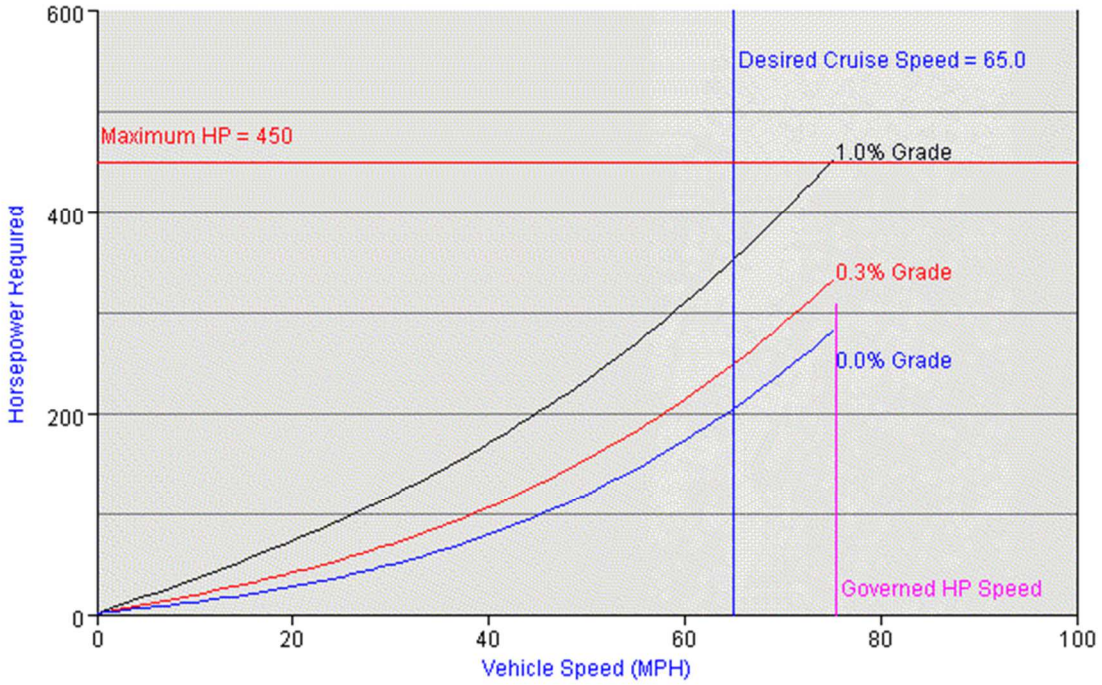

VEHICLE SPECIFICATIONS SUMMARY - SPEEDABILITY

Model	114SD
Cab Size (829)	114 INCH BBC FLAT ROOF ALUMINUM CONVENTIONAL CAB
Desired Cruise Speed (mph)	65.0
Expected Front Axle(s) Load (lbs)	20000.0
Expected Pusher Axle(s) Load (lbs)	0.0
Expected Rear Axle(s) Load (lbs)	46000.0
Expected Tag Axle(s) Load (lbs)	13300.0
Expected GVW (lbs)	79300
Expected GCW (lbs)	0.0
Engine (101)	DETROIT DD13 12.8L 450 HP @ 1625 RPM, 1900 GOV RPM, 1550 LB-FT @ 975 RPM
Governed RPM	1900

HP at Governed RPM 315
RPM at Max HP....1625
Max HP 450
HP at Governed RPM (High Torque) 315
RPM at Max HP (High Torque)....1625
Max HP (High Torque) 450
Multi-torque .... NO
Transmission (342).... ALLISON 4500 RDS AUTOMATIC TRANSMISSION WITH PTO PROVISION
Rear Axle (420) .... RT-46-160P 46,000# R-SERIES TANDEM REAR AXLE
Number of Speeds 1
Rear Axle Gear Ratio(s)....4.56 REAR AXLE RATIO
Rear Tires (094) ....MICHELIN X MULTI D 11R22.5 16 PLY RADIAL REAR TIRES
Revolutions per Mile....494
Trailer Width (in)....0.0
Trailer Height (ground to top) (ft) 10.0
Body Width (in)....96.0
Body Height (ground to top) (ft) 10.0
Roof Mounted Aero Device (784) ....NO AIR SHIELD OR BRACKETS
Road Surface (AB5) .SMOOTH CONCRETE OR ASPHALT PAVEMENT - MOST SEVERE IN-TRANSIT (BETWEEN SITES) ROAD SURFACE
Auxiliary Transmission (352)....NO AUXILIARY TRANSMISSION
High Gear Ratio ....N/A
Low Gear Ratio ....N/A
Transfer Case (373) .... NO TRANSFER CASE
High Gear Ratio ....N/A
Low Gear Ratio ....N/A

TABLE SUMMARY - SPEEDABILITY

Top Gear Speedability	At Max Power Speed	At Desired Cruise Speed
Top Gear Vehicle Speed (mph)	64.6	65.0
Engine RPM	1625	1635
Gross Power Available (HP)	450	N/A
Power (HP) Required for:		
Level Road	204	207
0.3% Grade	248	251
1.0% Grade	351	354
*Blue background represents value input by user.		

Performance calculations are estimates only. If performance calculations are critical, please contact Customer Application Engineering.

F R A M E R B M

VEHICLE SPECIFICATIONS SUMMARY - FRAME RBM

Wheelbase (545) .....7200MM (284 INCH) WHEELBASE
Frame Rails (546).....1/2X3.64X11-7/8 INCH STEEL FRAME (12.7MMX301.6MM/0.5X11.88 INCH) 120KSI(546)
Yield Strength (psi).....120000
Section Modulus (per rail) (cu in).....26.26
RBM (per rail) (lbf-in) 3204000
Inner Frame Reinforcement (547) ..... 1/4 INCH (6.35MM) C-CHANNEL INNER FRAME REINFORCEMENT
Outer Frame Reinforcement (548) .....NO OUTER FRAME REINFORCEMENT

TABLE SUMMARY - FRAME RBM

Item	Description / Value
Wheelbase	7200MM (284 INCH) WHEELBASE
Frame	1/2X3.64X11-7/8 INCH STEEL FRAME (12.7MMX301.6MM/0.5X11.88 INCH) 120KSI
Inner Frame Reinforcement	1/4 INCH (6.35MM) C-CHANNEL INNER FRAME REINFORCEMENT
Outer Frame Reninforcement	NO OUTER FRAME REINFORCEMENT
Yield Strength (psi)	120000
Section Modulus - per rail (cu. in.)	36.74
Frame RBM - per rail (lbf-in)	4409800

Performance calculations are estimates only. If performance calculations are critical, please contact Customer Application Engineering.